SUBMITTAL INFORMATION

Kornerhorn Ball Valve - *(KHBV-1-HB-2 style)*

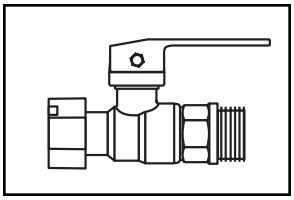

FEMALE KORNERHORN THREAD BY MALE KORNERHORN THREAD

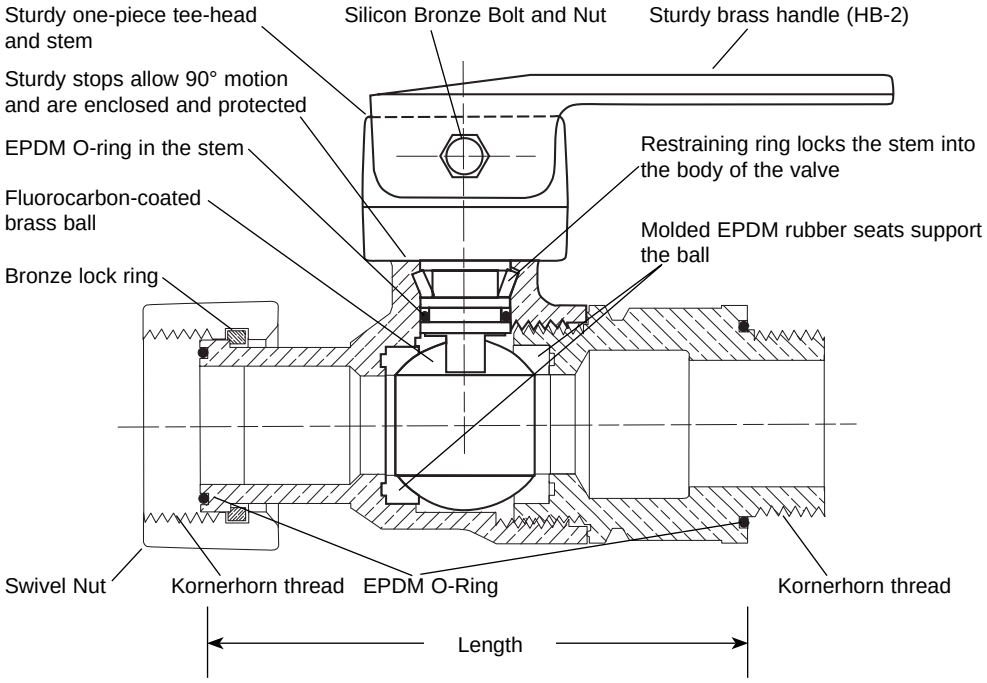

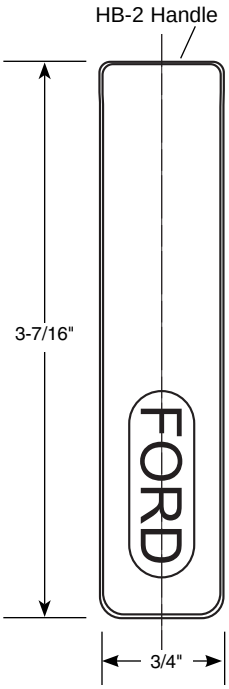

Valve Size	Female End Size	Male End Size	Valve Length	Handle Length	Approx. Wt. Lbs.	Catalog Number	✓ Submitted Item(s)
5/8"	3/4"	3/4"	3-1/2"	3-7/16"	1.7	KHBV-1-HB-2	

FEATURES

- All brass conforms to AWWA Standard C800 (ASTM B-62 and ASTM B-584, UNS NO C83600 - 85-5-5-5)
- Valve is non-directional and is watertight with flow in either direction.
- Ends are integral or secured with adhesive to prevent unintentional disassembly.
- Hole for attaching handle is provided in the tee-head.
- The straight HB-2 brass handle is cast from waterworks brass (85-5-5-5) and is factory assembled with a silicon bronze bolt and nut.
- 300 PSI working pressure

The Ford Meter Box Company considers the information in this submittal form to be correct at the time of publication. Item and option availability, including specifications, are subject to change without notice. Please verify that your product information is current.

The Ford Meter Box Company, Inc.
P.O. Box 443, Wabash, Indiana U.S.A. 46992-0443
Phone: 260-563-3171 / Fax: 800-826-3487
Overseas Fax: 260-563-0167
http://www.fordmeterbox.

08/16/05

Submitted By: