# SUBMITTAL INFORMATION

## Inverted Key Curb Stop - *(Z44-xxx-Q style)*

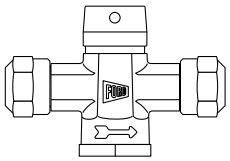

**QUICK JOINTS FOR COPPER OR PLASTIC TUBING (CTS) BOTH ENDS**

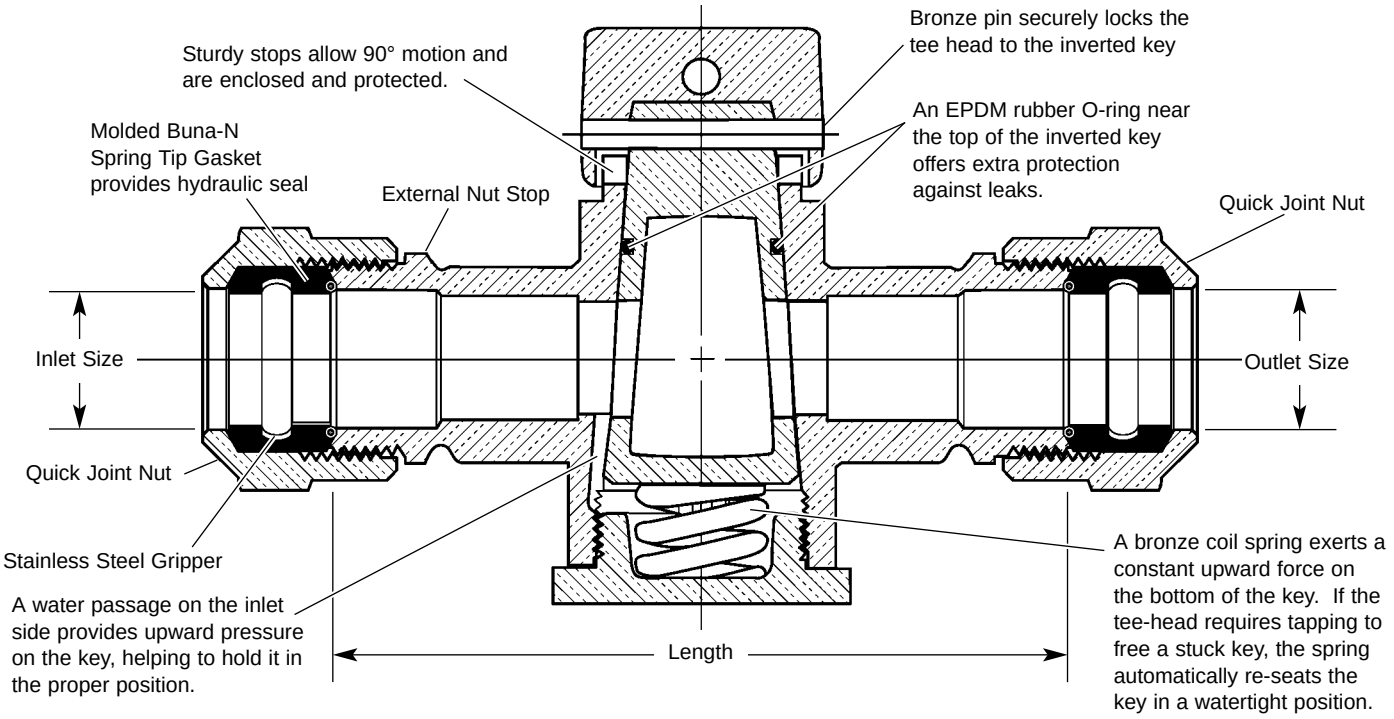


| Valve Size | Inlet Size | Outlet Size | Length | Approx. Wt. Lbs | Part Number | ✓ Submitted Item(s) |
|---|---|---|---|---|---|---|
| 1/2" | 1/2" | 1/2" | 3-5/8" | 1.7 | Z44-111-Q | |
| 3/4" | 5/8" | 5/8" | 5-1/16" | - | Z44-322-Q | |
| 3/4" | 3/4" | 3/4" | 5-3/32" | 2.8 | Z44-333-Q | |
| 1" | 1" | 1" | 6-1/16" | 4.4 | Z44-444-Q | |

**Note:** Ford recommends insert stiffeners when using plastic pipe or tubing

## FEATURES

- All brass conforms to AWWA Standard C800-89 (ASTM B-62, UNS NO C83600 - 85-5-5-5)
- Hole for attaching curb box rod is provided in Tee Head.
- Meets 100 PSI pressure requirement of AWWA Standard C800.
  **Optional Full 360° Tee Head Rotation**. Insert “R” into Part Number.
  Example: Z44-111**R**-Q

The Ford Meter Box Company considers the information in this submittal form to be correct at the time of publication. Item and option availability, including specifications, are subject to change without notice. Please verify that your product information is current.

**The Ford Meter Box Company, Inc.**
P.O. Box 443, Wabash, Indiana U.S.A. 46992-0443
Phone: 260-563-3171 / Fax: 800-826-3487
Overseas Fax: 260-563-0167
http://www.fordmeterbox.com 01/25/02

Submitted By: